OnSpec USA

APEX

R32 HEAT PUMP SYSTEM

SUBMITTAL DATA

OSAPX18H2301AH / OSAPX18H2301AO
18000 BTU/H Wall Mounted Heat Pump System

Job Name	Location	Date
Purchaser	Engineer	
Submmited to	For	
Unit Designation	Schedule No.	

OSAPX-RC1	OSAPX18H2301AH	OSAPX18H2301AO	OSAPX-WC1 (Optional)

GENERAL FEATURES

- New R32 Refrigerant
- High Efficiency DC Inverter Technology
- Elegant and Quiet Design
- Auto-Clean Function on Indoor Unit
- Wireless Remote with LCD Display
- Wired Controller Options
- Wi-Fi Included (Factory Installed)
- Low Ambient Cooling down to -20˚F (Range -20˚F to 122˚F)
- Low Ambient Heating down to -22˚F (Range -22˚F to 86˚F)
- Coil (Outdoor) Copper Tube/Aluminum Fin with Anti-Corrosion Coil Coating (Gold Colored Fin - 1500Hr Salt Spray Rating)
- Coil (Indoor) Copper Tube/Aluminum Fin with Anti-Corrosion Coil Coating (Blue Colored Fin - 500Hr Salt Spray Rating)

SPECIFICATIONS, FEATURES & FUNCTION SUMMARY

SYSTEM TYPE			HEAT PUMP
Outdoor Model			OSAPX18H2301AO
Indoor Model			OSAPX18H2301AH
SYSTEM PERFORMANCE			
Cooling Capacity	Min - Max	Btu/h	4,435 - 25,590
	Rated Capacity @95˚F	Btu/h	18,000
Heating Capacity	Min - Max	Btu/h	5,118 - 26,272
	Rated Capacity @47˚F	Btu/h	18,600
	Rated Capacity @17˚F	Btu/h	15,500
	Rated Capacity @5˚F	Btu/h	18,000
SEER2			27.5
EER2			14.3
HSPF2			10.0
COP @5˚F			1.8
Cooling Temperature Range		˚F	-20 - 122
Heating Temperature Range		˚F	-22 - 86
Refrigerant Type			R32
INDOOR UNIT			**OSAPX18H2301AH**
Air flow (Min - Max)		CFM	471 - 736
Sound Pressure Level (Min - Max)		dB(A)	35 - 49
Dehumidification		pt/hr	3.80
External Dimensions (W x H x D)		in	43-45/64 × 13-21/32 × 10-1/8
Package Dimension (W x H x D)		in	45-55/64 × 13-21/32 × 16-1/2
Net Weight		lbs	38.6
Gross Weight		lbs	45.2
OUTDOOR UNIT			**OSAPX18H2301AO**
Compressor Type			DOUBLE CYLINDER / 1 - STAGE INVERTER
Sound Pressure Level		dB(A)	59
External Dimensions (W x H x D)		in	37 23/32 × 25 63/64 × 15 53/64
Package Dimension (W x H x D)		in	40-5/8 × 29-1/64 × 17-61/64
Net Weight		lbs	94.8
Gross Weight		lbs	104.7
REFRIGERANT PIPING			
Refrigerant Charge		oz	47.6
Additional Charge		oz/ft	0.4
Line Set Size (Liquid - Gas) - Flared Connections		in	1/4 - 5/8
Pre-Charge Length		ft	25
Pipe Length (Min - Max)		ft	10 - 131
Max. Pipe Elevation		ft	82
ELECTRICAL			
Power Supply			208-230V / 1Ph / 60Hz (Powered by the Outdoor Unit)
Voltage Range (Min - Max)		VAC	187 - 253
Rated Current - Cooling		A	12.5
Rated Current - Heating		A	16
MOCP		A	25
MCA		A	23
Main Power Wire Size		AWG	Per Local Code
Interconnecting Wire Size		AWG	14 / 4

FEATURES & FUNCTIONS SUMMARY	
Inverter Type	DC inverter
Ultra Low Frequency Torque Control	Yes
Basepan With Electric Heater	Yes
Compressor With Electric Heater	Yes
Indoor & Outdoor Fin Coating	Acrylic Resin/Anti-Corrosion
Intelligent Defrosting	Yes
Intelligent Preheating	Yes
Low Voltage Startup	Yes
Memory/Power Failure Recovery	Yes
Self Diagnosis	Yes
Wired Controller Interface	Yes
WiFi Included	Yes
Indoor Fan Type	Crossflow
Multi Fan Speeds	7 Speeds
Indoor Unit Display	Yes
Auxilary Electrical Heater	No
Ventilation (Outdoor Air)	No
REMOTE CONTROLLER FUNCTIONS	
Auto Mode	Yes
Auto Fan	Yes
Auto Swing (Horizontal Auto Swing)	Yes
Auto Swing (Vertical Auto Swing)	Yes
Clock on Remote Controller	Yes
Dry Mode	Yes
Dry Anti-Mildew Mode	Yes
Energy Saving Mode	Yes
Dirty Filter Alert	Yes
Auto Clean	Yes
I Feel Function	Yes
Lock on Remote Controller	Yes
Quiet Mode	Yes
Room Temperature Display	Yes
Sleep Mode	Yes
4 Sleep Mode Options	Yes
Timer Mode	Yes
Turbo Mode	Yes
Display On/Off Control	Yes
Freeze Guard Mode	No
Humidity Control	Yes

INDOOR UNIT

Unit: inch

OSAPX18H2301AH	
DIMENSIONS	
W	43 45/64
H	13 21/32
D	10 1/8
W1	10 27/32
W2	22 7/64
W3	10 3/4

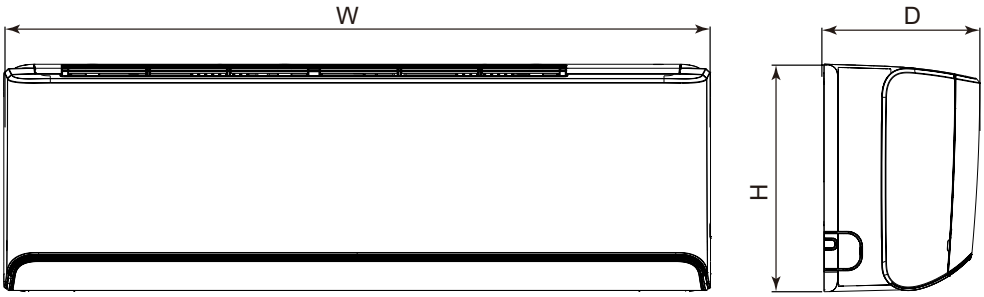

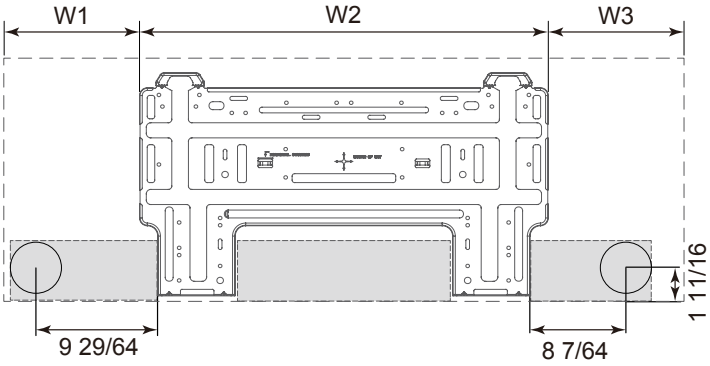

OUTDOOR UNIT

Unit: inch

OSAPX18H2301AO

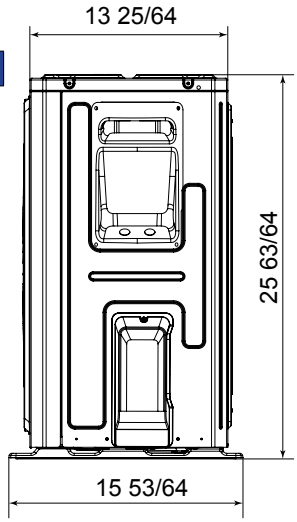

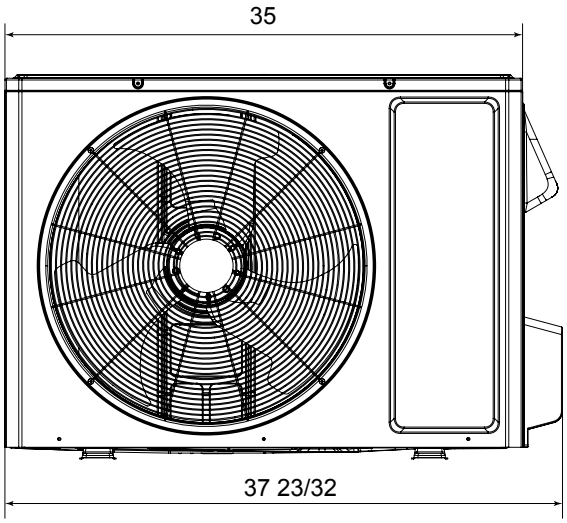

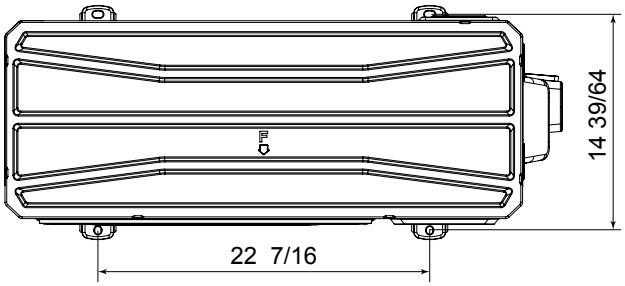

CLEARANCES

INDOOR UNIT
Minimum clearence

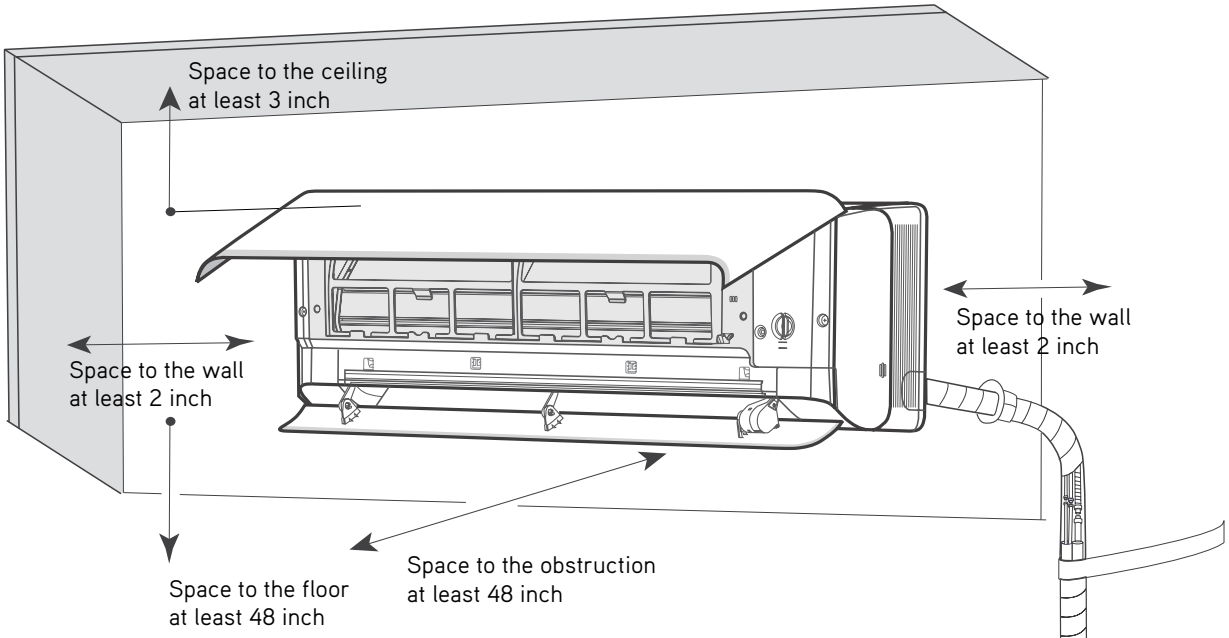

OUTDOOR UNIT
Minimum clearence

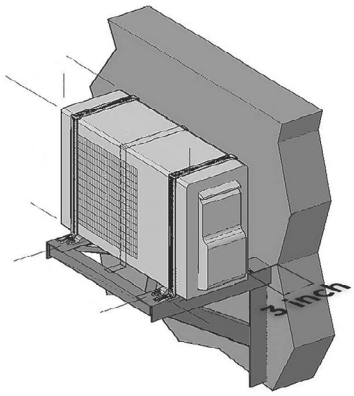

NOTE:
If bottom of the unit is free of airflow obstructions similar to the mounting bracket figure, the clearance to the wall on the back can be reduced to 3 inches.

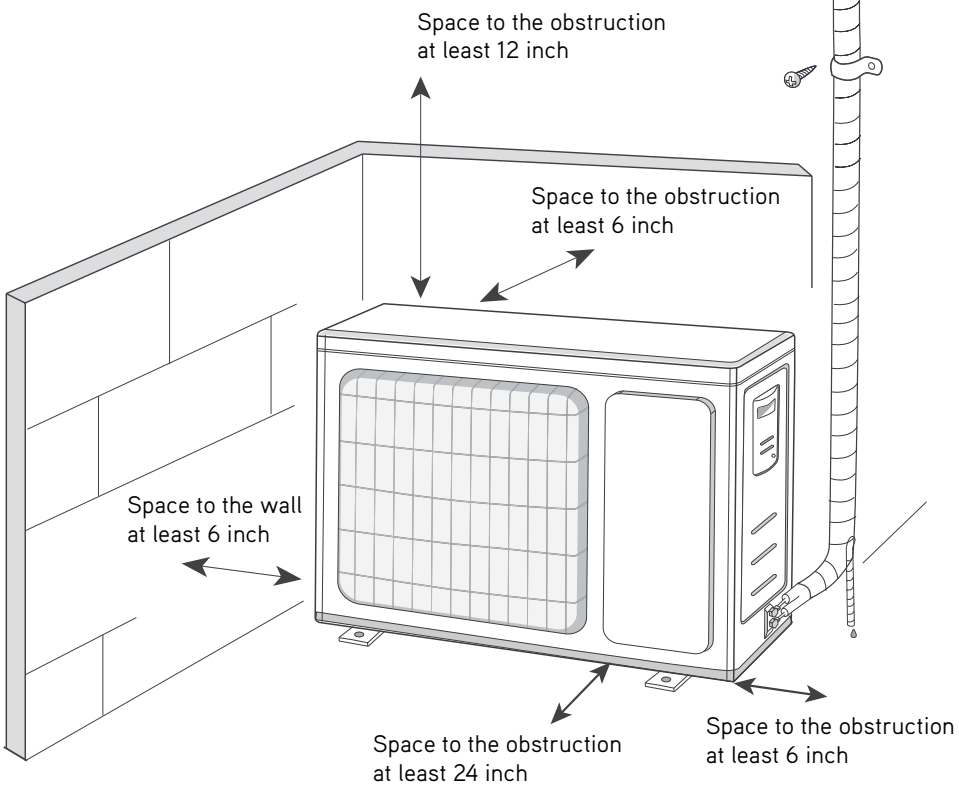

Specifications are subject to change without notice. Manufacturer reserves the right to discontinue or modify specifications or designs without notice or without incurring obligations. All Rights reserved.